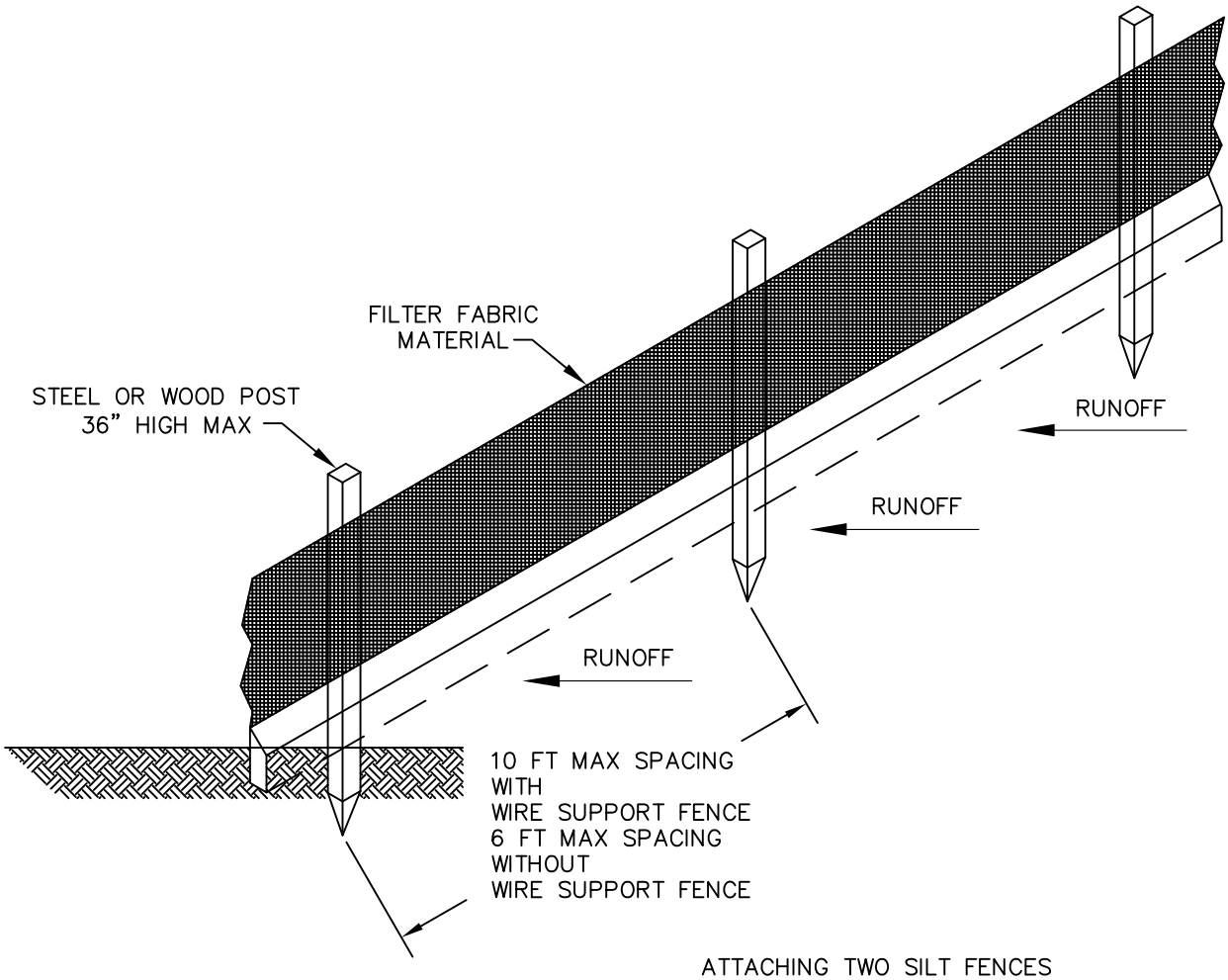

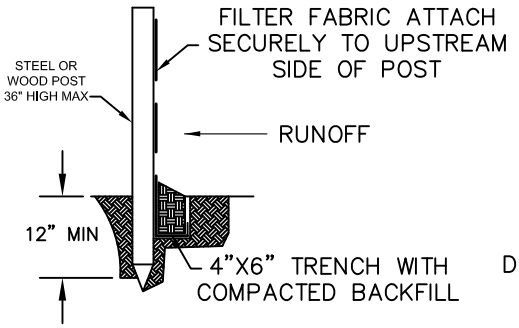

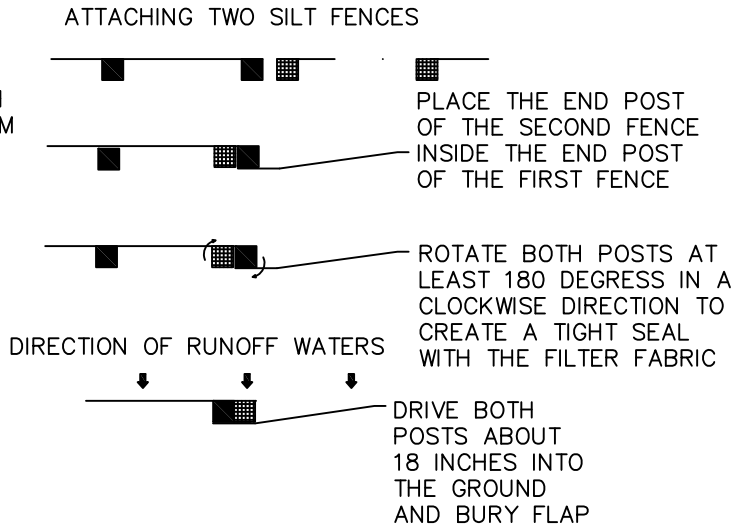

NOTES:
1– INSPECT AND REPAIR FENCE AFTER EACH STORM EVENT AND REMOVE SEDIMENT WHEN NECESSARY.
2– REMOVED SEDIMENT SHALL BE DEPOSITED TO AN AREA THAT WILL NOT CONTRIBUTE SEDIMENT OFF–SITE AND CAN BE PERMANENTLY STABILIZED.
3 – SILT FENCE SHALL BE PLACED ON SLOPE CONTOURS TO MAXIMIZE PONDING EFFICIENCY.

TAMARAC
The City For Your Life

CITY OF TAMARAC
PUBLIC SERVICES DEPARTMENT
ENGINEERING DIVISION
6011 NOB HILL ROAD
TAMARAC, FL, 33321

STANDARD DETAIL

SILT FENCE DETAIL
FIGURE SWPP-1

REVISIONS

No.	Date	Remarks	By

Drawn By:		Date:		Approved By:		Date:	

U:\Shared\Public Works\File\ENGINEERING\Minimum Standards\CITY OF TAMARAC STANDARDS\CADD\SWPP\SWPP-1 Silt Fence Detail.dwg

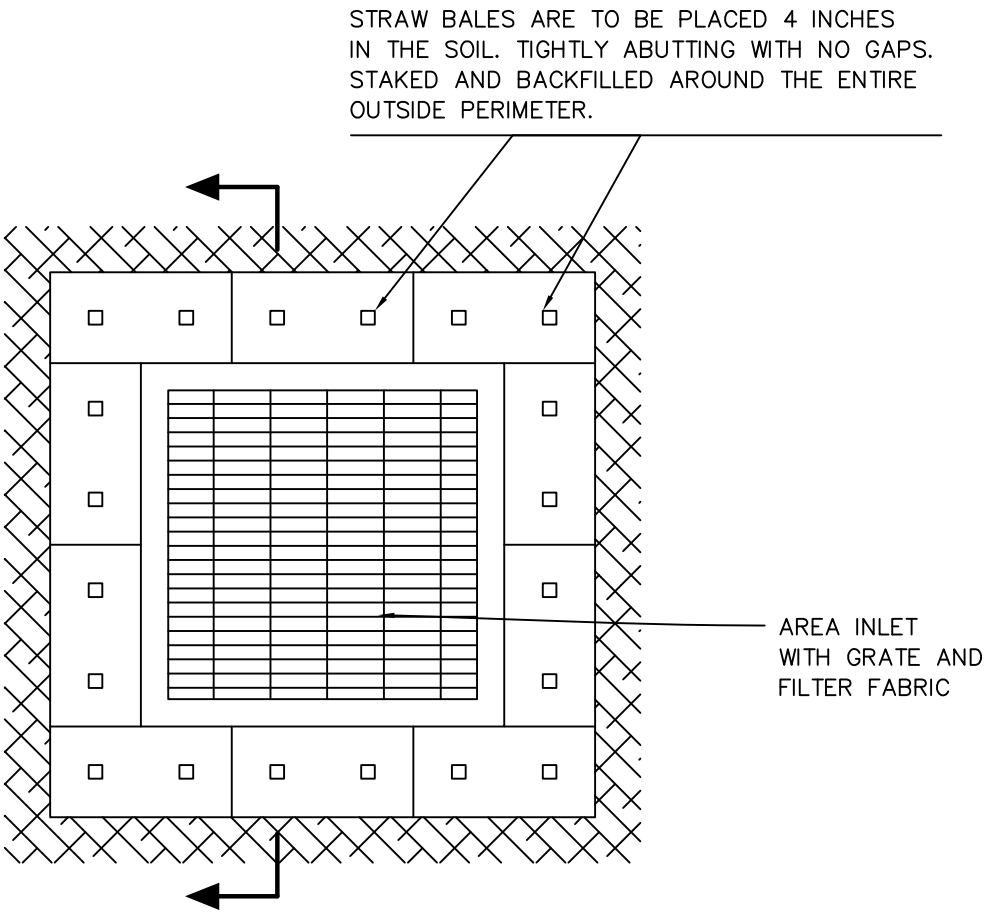

PLAN VIEW

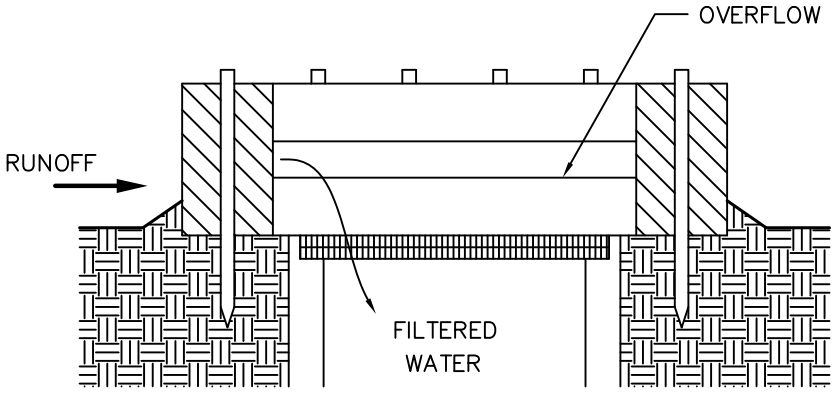

SECTION

NOTE: STRAW BALE FILTERS ARE NOT TO BE USED IF ADJACENT AREA TO INLET IS PAVED

TAMARAC
The City For Your Life

CITY OF TAMARAC
PUBLIC SERVICES DEPARTMENT
ENGINEERING DIVISION
6011 NOB HILL ROAD
TAMARAC, FL, 33321

STANDARD DETAIL

STRAW BALE FILTER FOR AREA INLET
FIGURE SWPP-2

REVISIONS			
No.	Date	Remarks	By

Drawn By: | Date: | Approved By: | Date:

U:\Shared\Public Works\File\ENGINEERING\Minimum Standards\CITY OF TAMARAC STANDARDS\CADD\SWPP\SWPP-2 Straw Bale Filter.dwg

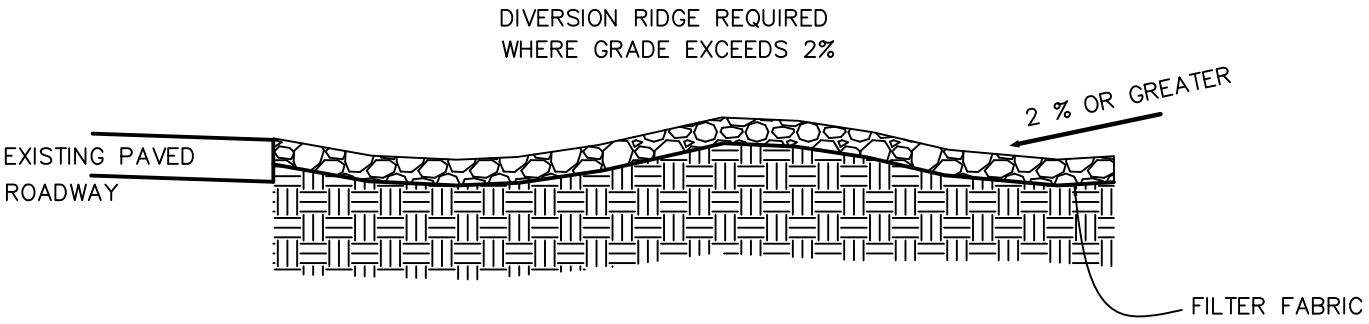

SECTION A–A

NOTE:
USE SANDBAGS, STRAW BALES OR OTHER APPROVED METHODS TO CHANNELIZE RUNOFF TO BASIN AS REQUIRED

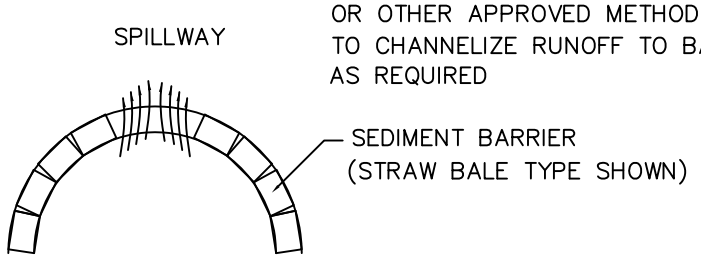

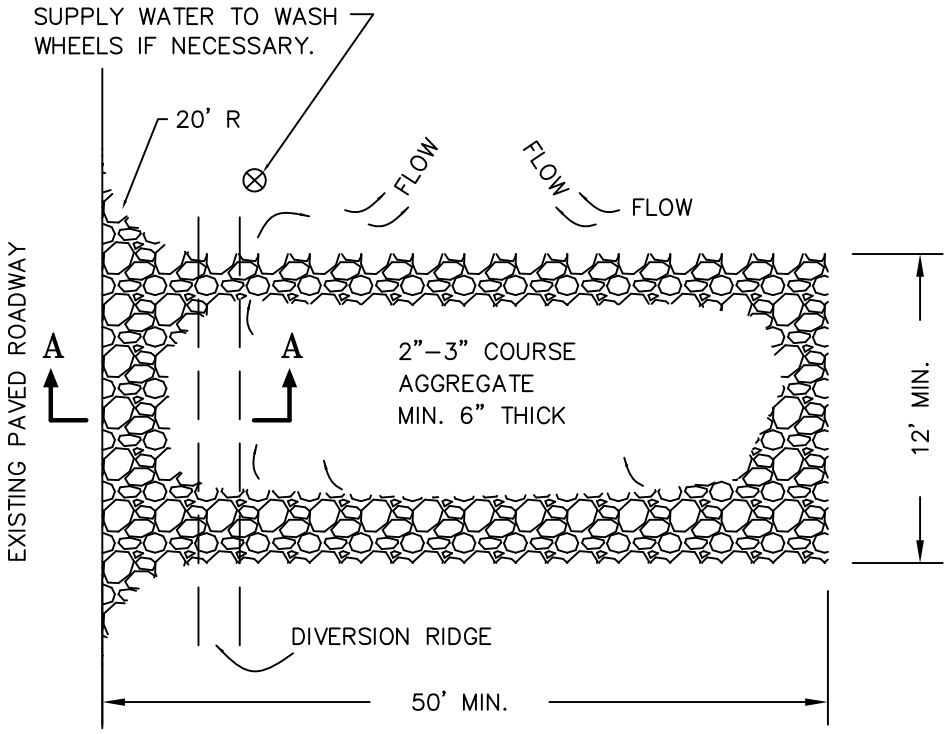

PLAN

NOTES

1. THE ENTRANCE SHALL BE MAINTAINED IN A CONDITION THAT WILL PREVENT TRACKING OR FLOWING OF SEDIMENT ONTO PUBLIC RIGHTS–OF–WAY. THIS MAY REQUIRE TOP DRESSING, REPAIR AND/OR CLENOUT OF ANY MEASURES USED TO TRAP SEDIMENT.

2. WHEN NECESSARY, WHEELS SHALL BE CLEANED PRIOR TO ENTRANCE ONTO PUBLIC RIGHT–OF–WAY.

3. WHEN WASHING IS REQUIRED, IT SHALL BE DONE ON AN AREA STABILIZED WITH CRUSHED STONE THAT DRAINS INTO AN APPROVED SEDIMENT TRAP OR SEDIMENT BASIN.

TAMARAC
The City For Your Life

CITY OF TAMARAC
PUBLIC SERVICES DEPARTMENT
ENGINEERING DIVISION
6011 NOB HILL ROAD
TAMARAC, FL, 33321

STANDARD DETAIL

TEMPORARY GRAVEL
CONSTRUCTION ENTRANCE
FIGURE SWPP-3

REVISIONS			
No.	Date	Remarks	By

Drawn By: | Date: | Approved By: | Date:

U:\Shared\Public Works\File\ENGINEERING\Minimum Standards\CITY OF TAMARAC STANDARDS\CADD\SWPP\SWPP-3 Temporary Gravel Entrance.dwg

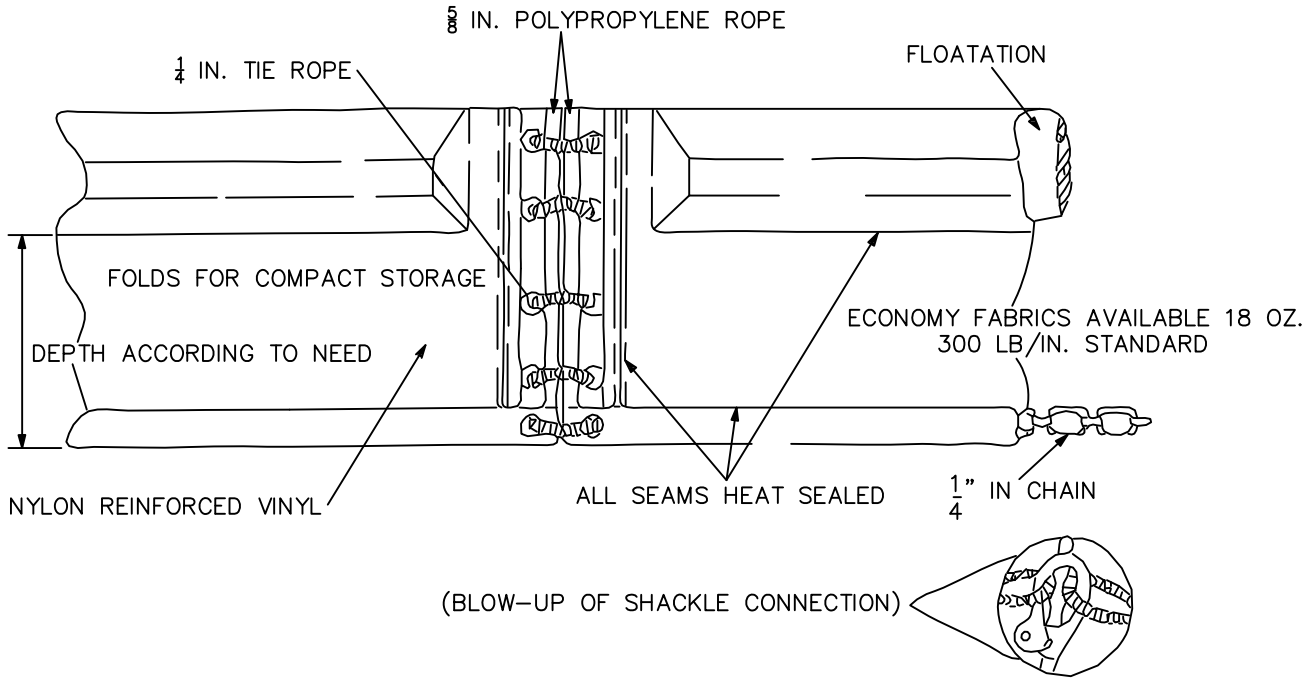

TYPE II

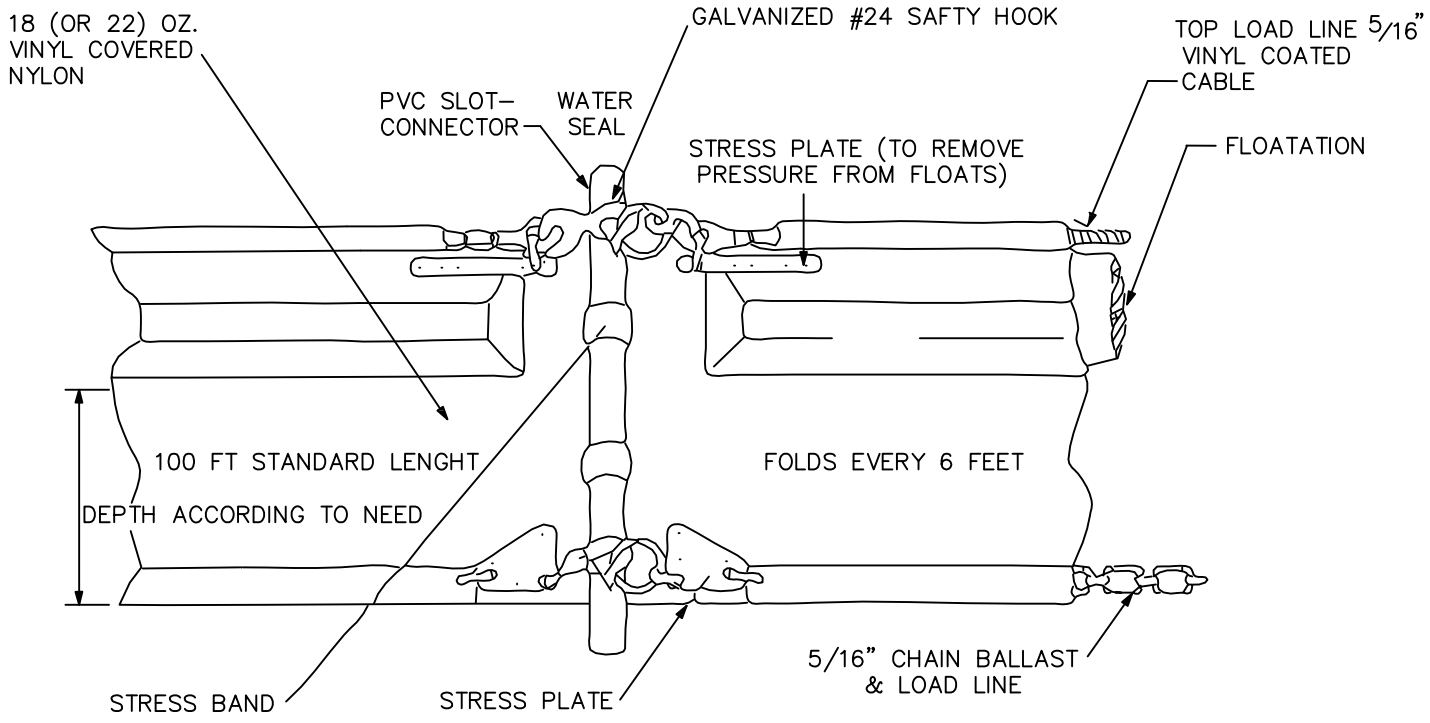

TYPE II

TAMARAC
The City For Your Life

CITY OF TAMARAC
PUBLIC SERVICES DEPARTMENT
ENGINEERING DIVISION
6011 NOB HILL ROAD
TAMARAC, FL, 33321

STANDARD DETAIL

TURBIDITY BARRIER DETAIL
TYPE I & II
FIGURE SWPP-4

REVISIONS

No.	Date	Remarks	By

Drawn By: | Date: | Approved By: | Date:

U:\Shared\Public Works\File\ENGINEERING\Minimum Standards\CITY OF TAMARAC STANDARDS\CADD\SWPP\SWPP-4 Turbidity Barrier Type I & II.dwg

TYPE III

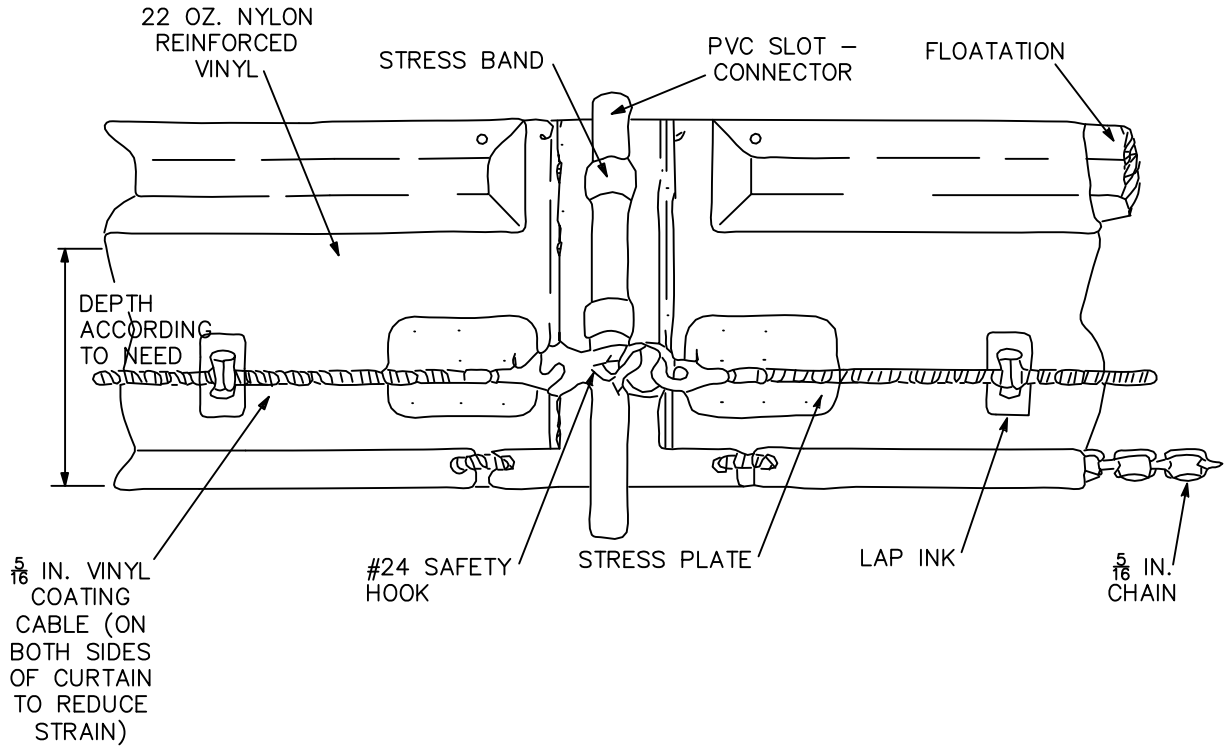

ORIENTATION WHEN INSTALLED (TIDAL SITUATION – TYPE III)

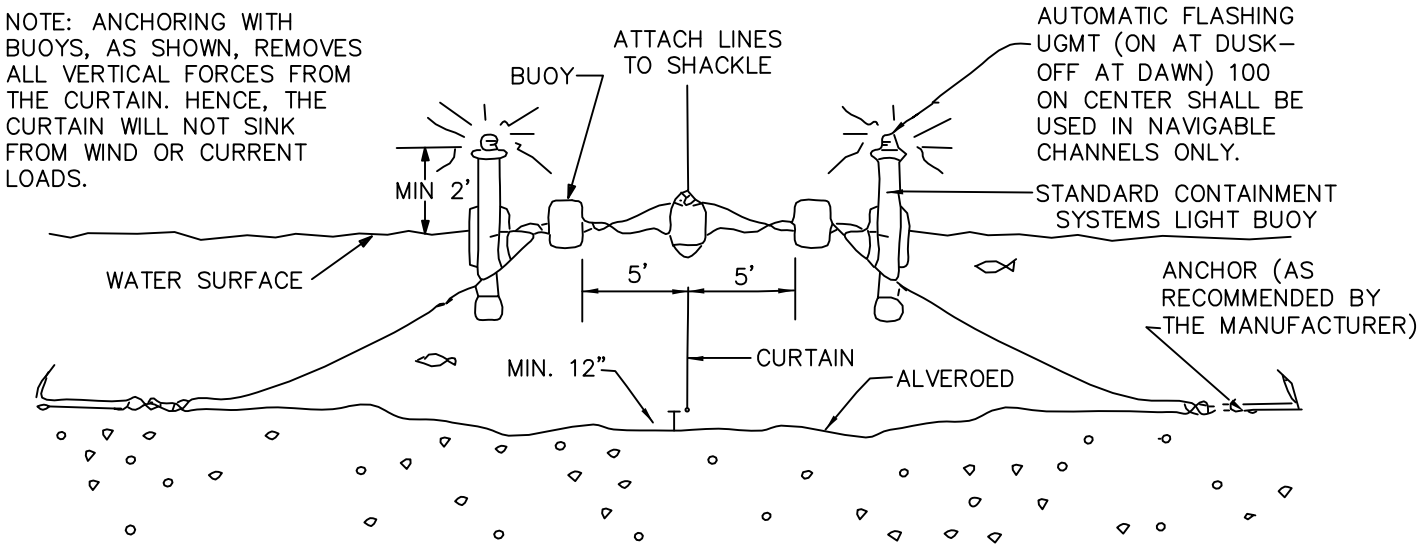

TAMARAC The City For Your Life	CITY OF TAMARAC PUBLIC SERVICES DEPARTMENT ENGINEERING DIVISION 6011 NOB HILL ROAD TAMARAC, FL, 33321	STANDARD DETAIL TURBBIDITY BARRIER DETAIL TYPE III FIGURE SWPP-5	REVISIONS No. / Date / Remarks / By Drawn By: / Date: / Approved By: / Date:

U:\Shared\Public Works\File\ENGINEERING\Minimum Standards\CITY OF TAMARAC STANDARDS\CADD\SWPP\SWPP-5 Turbidity Barrier Type III.dwg

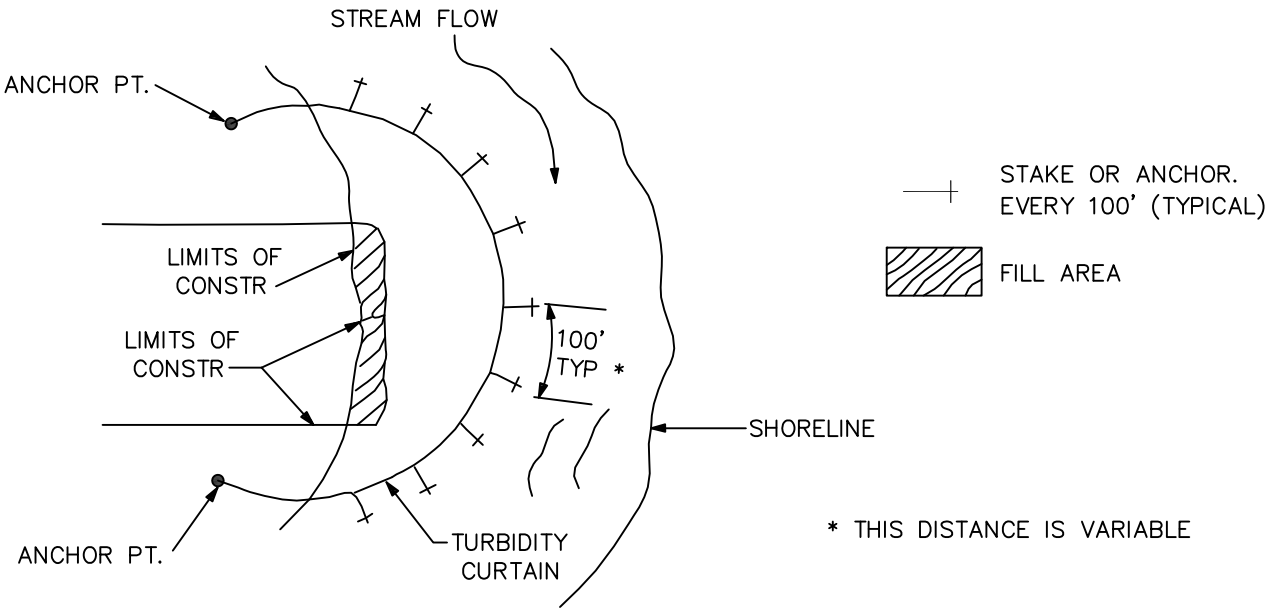

TIDAL WATERS AND/OR HEAVY WIND AND WAVE ACTION

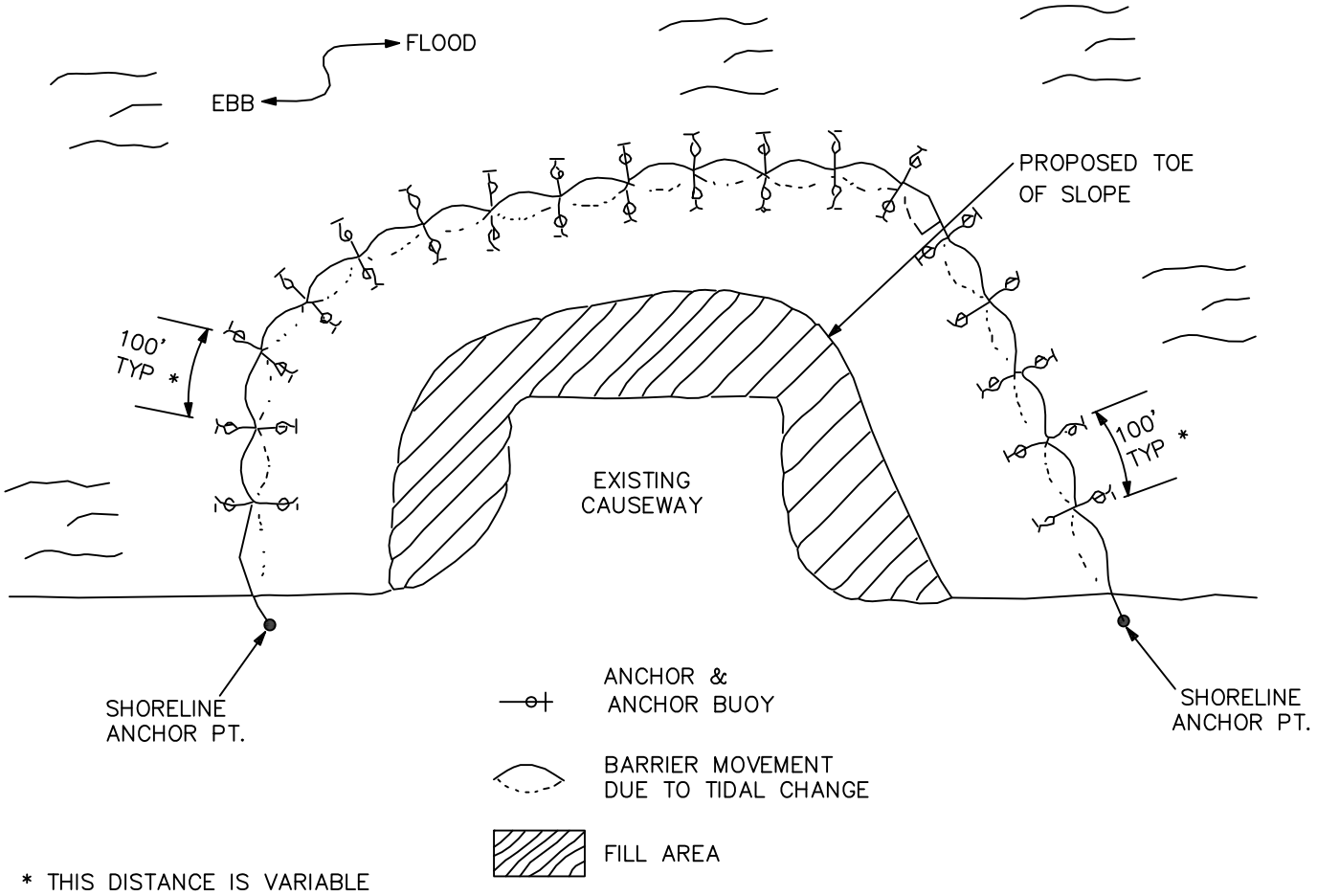

TAMARAC
The City For Your Life

CITY OF TAMARAC
PUBLIC SERVICES DEPARTMENT
ENGINEERING DIVISION
6011 NOB HILL ROAD
TAMARAC, FL, 33321

STANDARD DETAIL

TURBIDITY BARRIER DETAIL
TYPICAL INSTALLATION LAYOUTS
FIGURE SWPP-6

REVISIONS

No.	Date	Remarks	By

Drawn By: | Date: | Approved By: | Date:

U:\Shared\Public Works\File\ENGINEERING\Minimum Standards\CITY OF TAMARAC STANDARDS\CADD\SWPP\SWPP-6 Turbidity Barrier Typical Installation.dwg